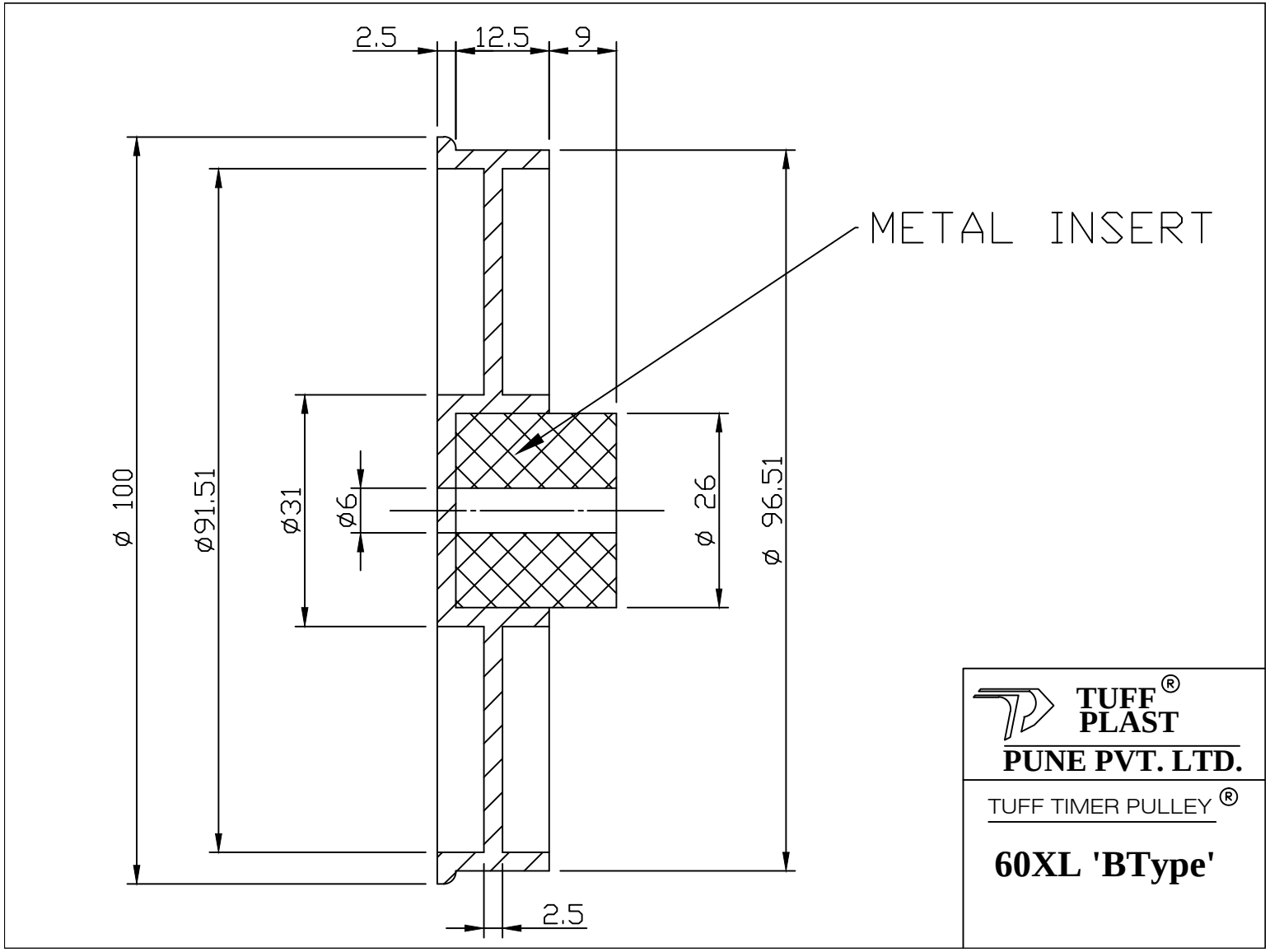

TUFF® PLAST

PUNE PVT. LTD.

TUFF TIMER PULLEY®

60XL 'BType'